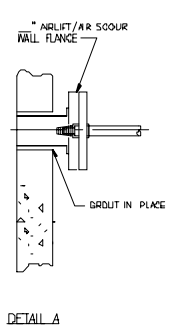

DETAIL A

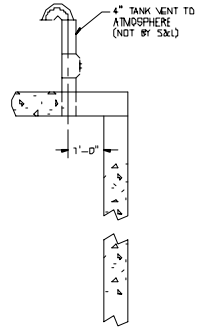

DETAIL B

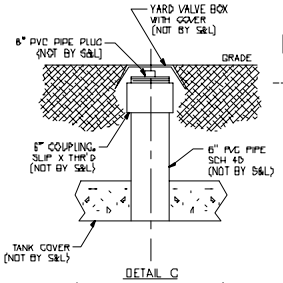

DETAIL C
(SUGGESTED PUMP-OUT DESIGN)

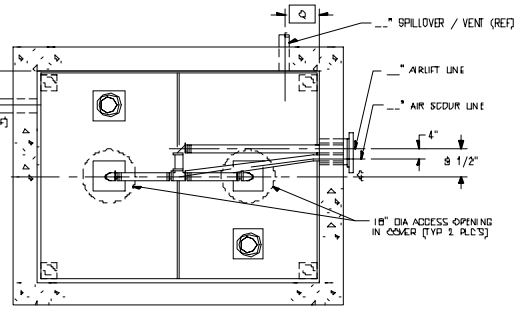

PLAN VIEW - COVER REMOVED

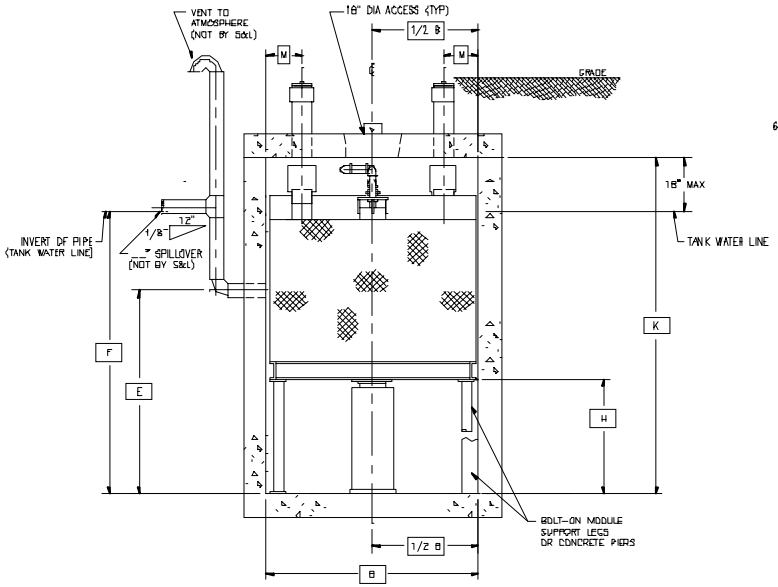

END VIEW

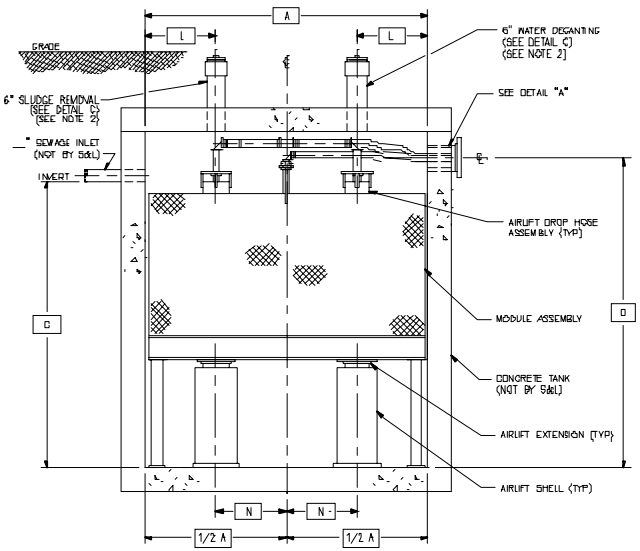

ELEVATION

S35B300

NOTE:

1. THE MEDIA TANK VENT PIPE IS SIZED TO LIMIT VENT BACKPRESSURE TO 12 INC WITH A MAXIMUM LENGTH OF 50', 3 ELBOWS AND A GOOSENECK. VENT SHALL BE INDEPENDENT OF BUILDING VENT SYSTEM.
2. ACCESS PIPES THROUGH TOP OF TANK MUST LINE UP WITH PUMP-OUT PIPES.
3. COPYRIGHT [C] 1996 SMITH AND LOVELESS INC.

				DRAWN BY: J. DURBIN	DATE: 2/96	ALLOWABLE TOLERANCES	FOR: FAST™ SEWAGE TREATMENT PLANT MODULAR FAST™
				CHECKED BY: BMW	DATE: 4/96	FRACTIONS -	
				APPROVED BY: SBM	DATE: 5/96	DECIMALS -	SIZE / U/M EA / WT.
LET	ECN NO	DATE	BY APVD	SCALE: NTS	CODE: 9	ANGLES °	FILE NAME S35B300A / PLOT SCALE 1=24.000
ORIGINAL ISSUE				© SMITH & LOVELESS, INC. 1996			SERIAL NO / DWG NO S35B300 / REV

SHEET 1 OF 1

THE DESIGN AND DETAIL OF THIS DRAWING IS THE PROPERTY OF SMITH & LOVELESS, INC. AND IS NOT TO BE USED EXCEPT IN CONNECTION WITH OUR WORK. DESIGN AND INVENTION RIGHTS ARE RESERVED. DIMENSIONS ARE IN INCHES UNLESS OTHERWISE NOTED.

Smith & Loveless Inc.