Advantex System

Example

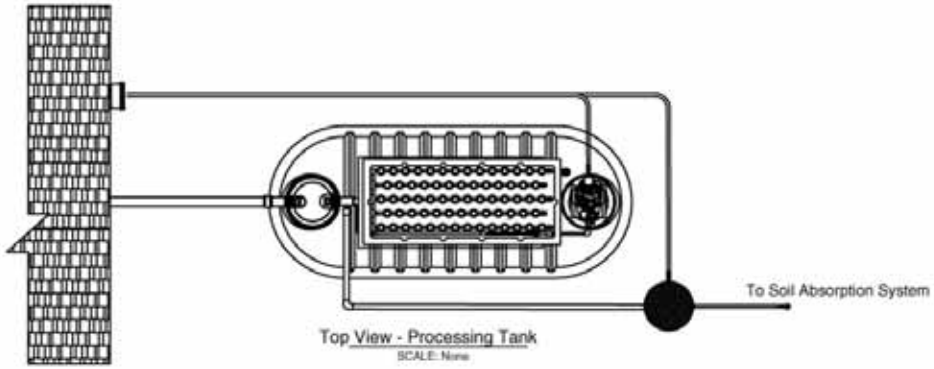

Top View - Processing Tank
SCALE: None

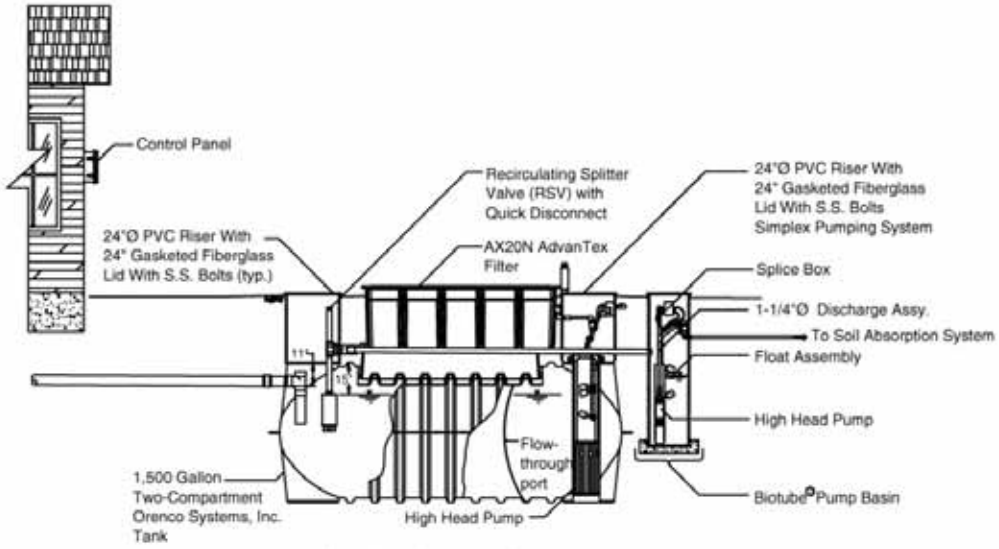

Side View - Processing Tank
SCALE: None

Orenco Systems®
Incorporated

814 AIRWAY AVENUE
SUTHERLIN, OREGON
97479-9012

TELEPHONE:
(541) 459-4449
FACSIMILE:
(541) 459-2884