135 gallon Capacity

Base Area 16.0 sq. **ft.**

Side Wall Height 14.1 Inches

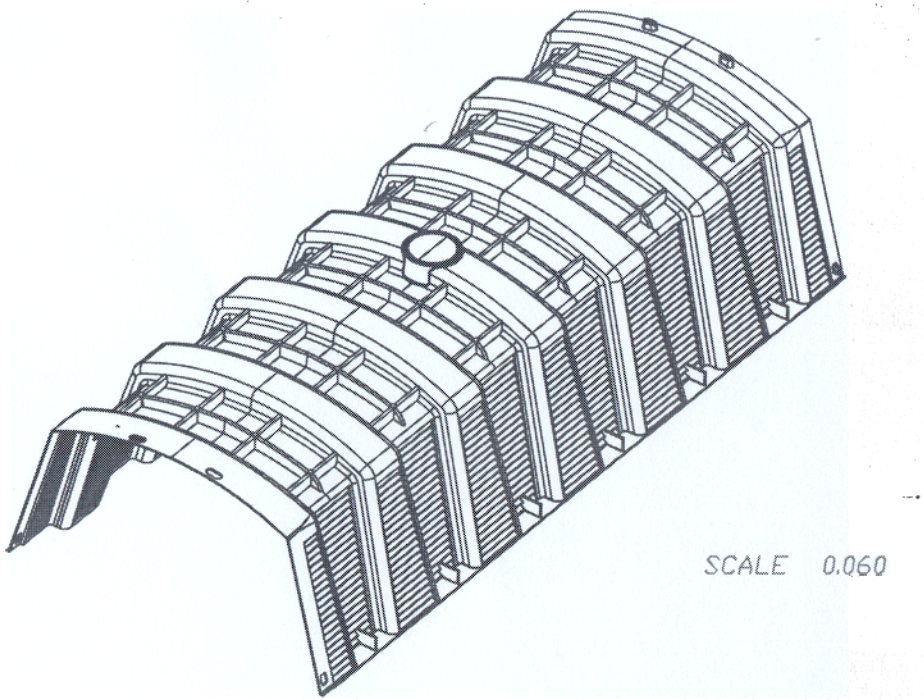

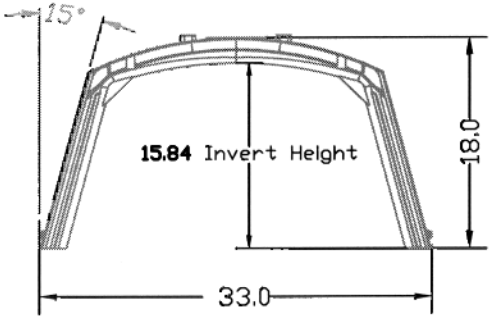

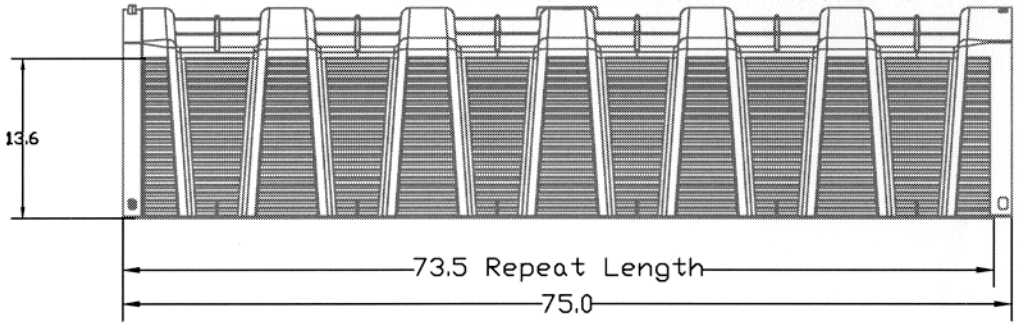

The Hancor Inc. High Capacity Enviro Chamber

Hancor Inc. Standard Capacity Enviro Chamber

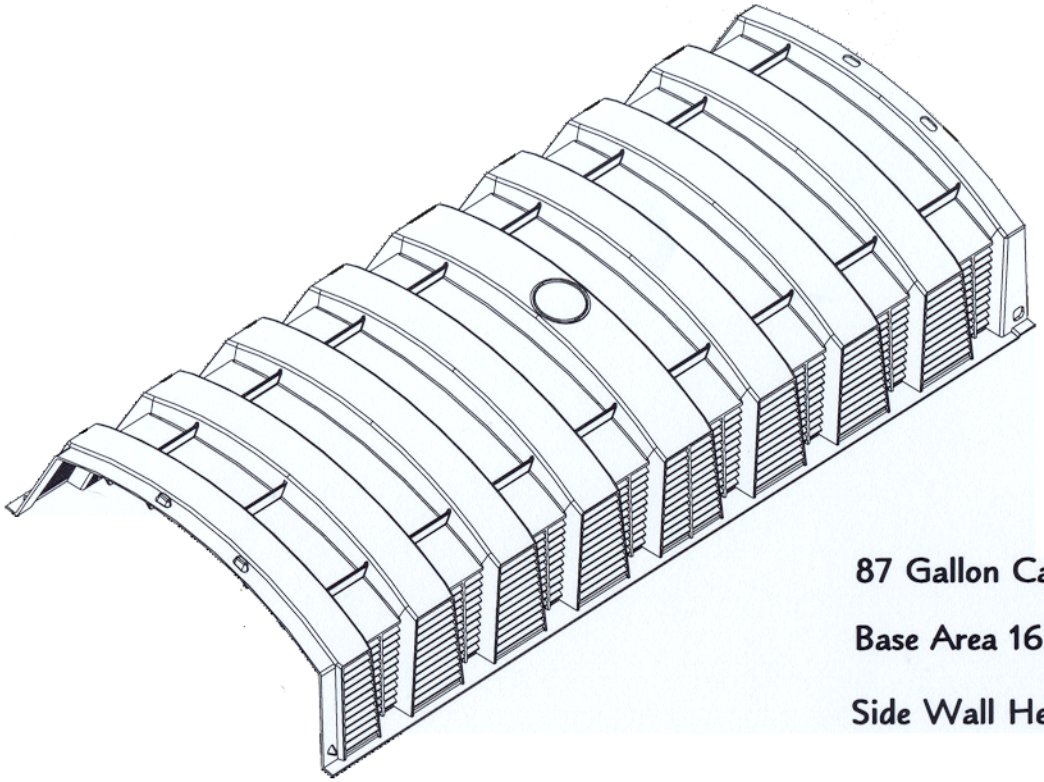

87 Gallon Capacity

Base Area 16.3 sq. ft.
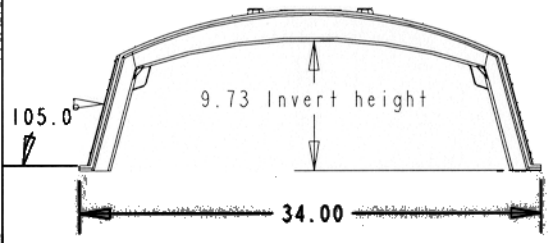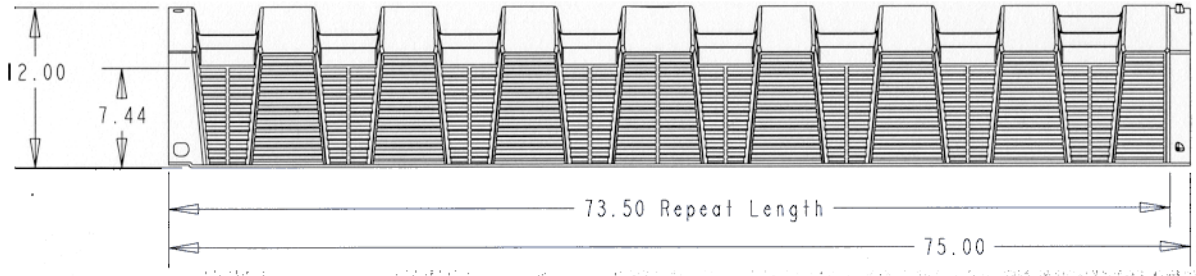
Side Wall Height 7.7 inch