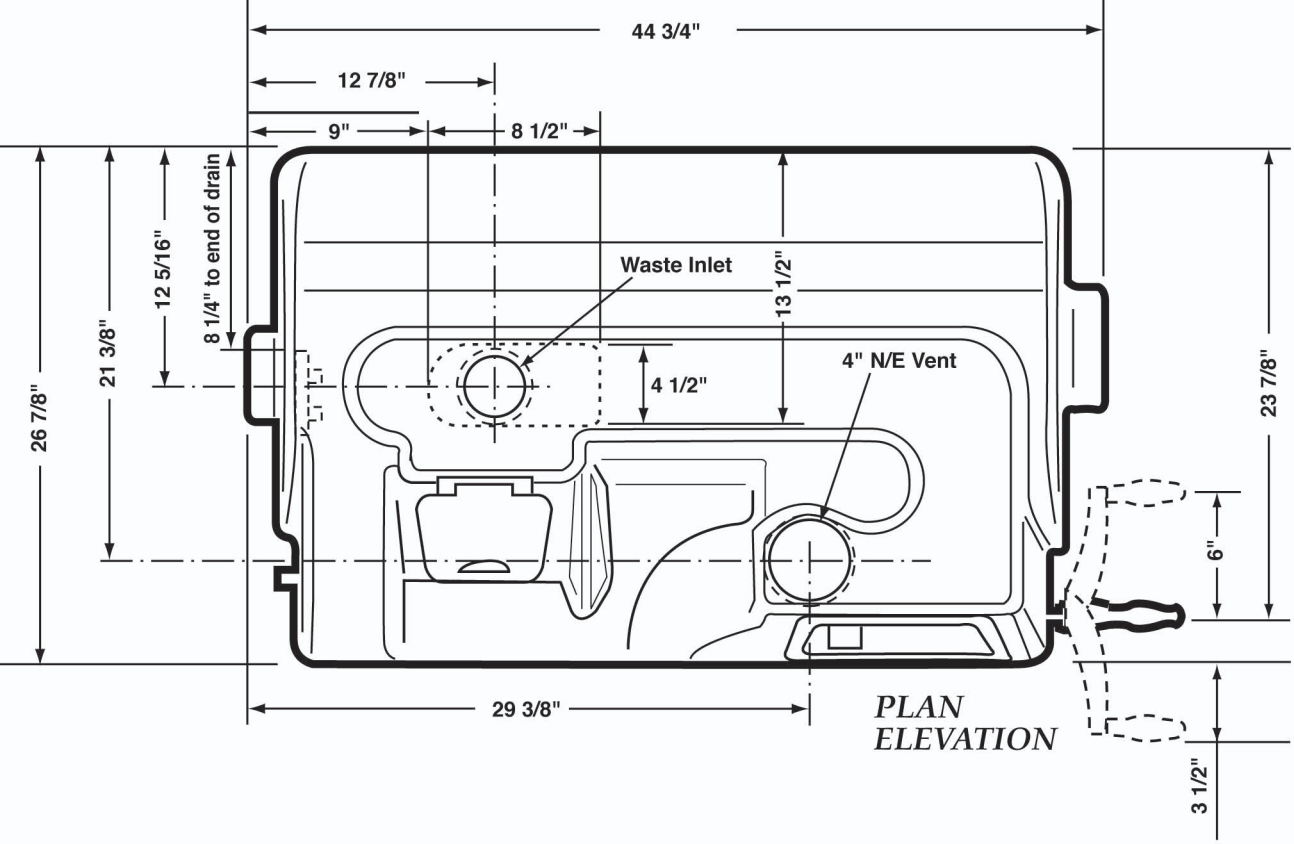

PLAN ELEVATION

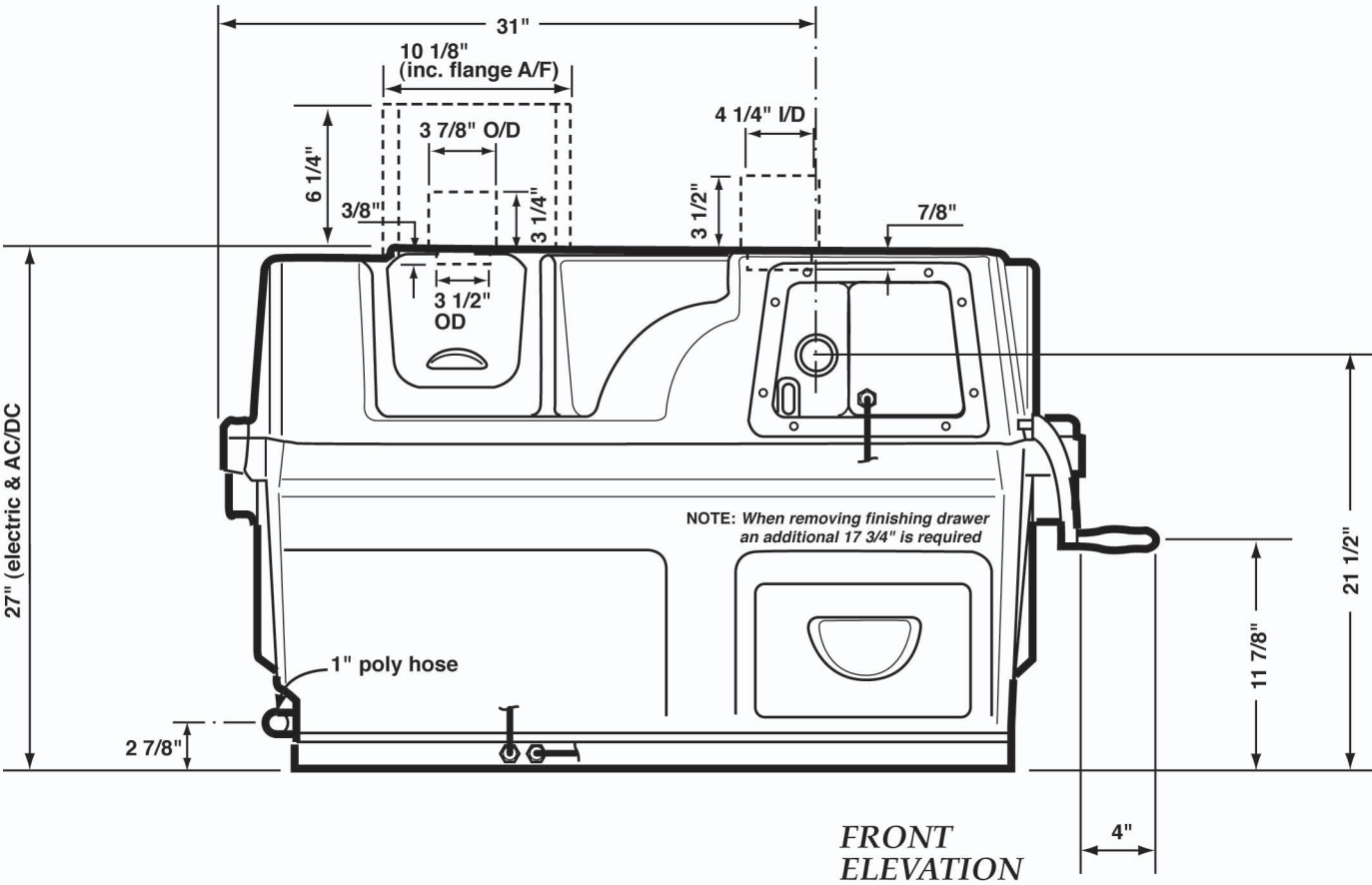

FRONT ELEVATION