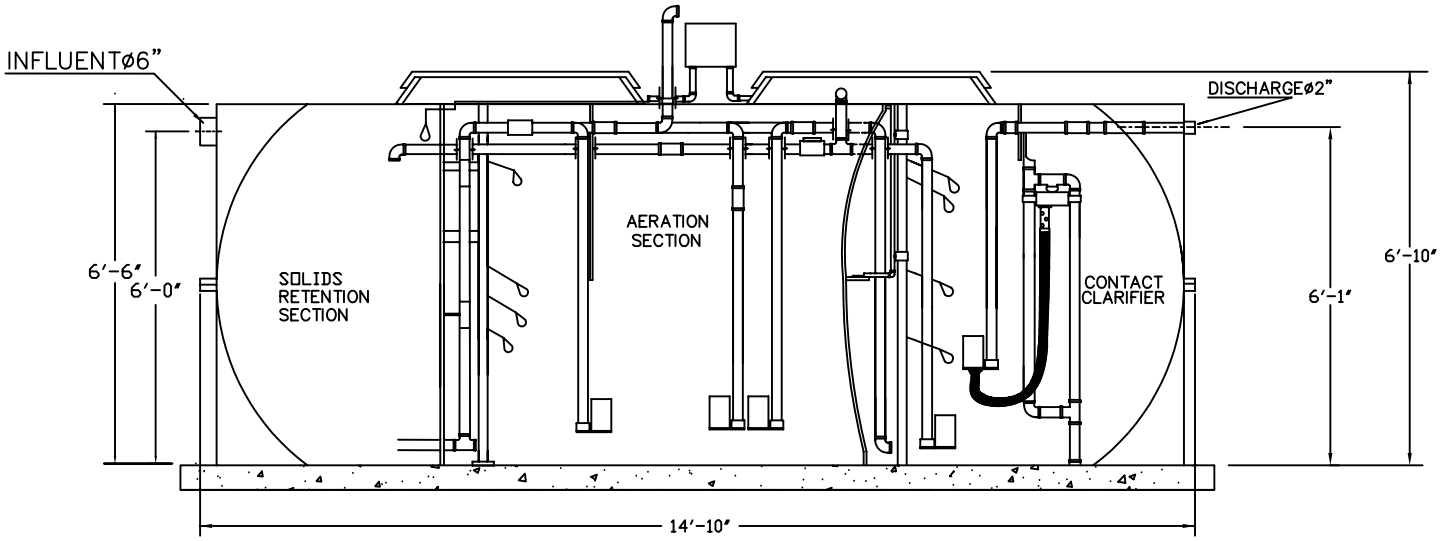

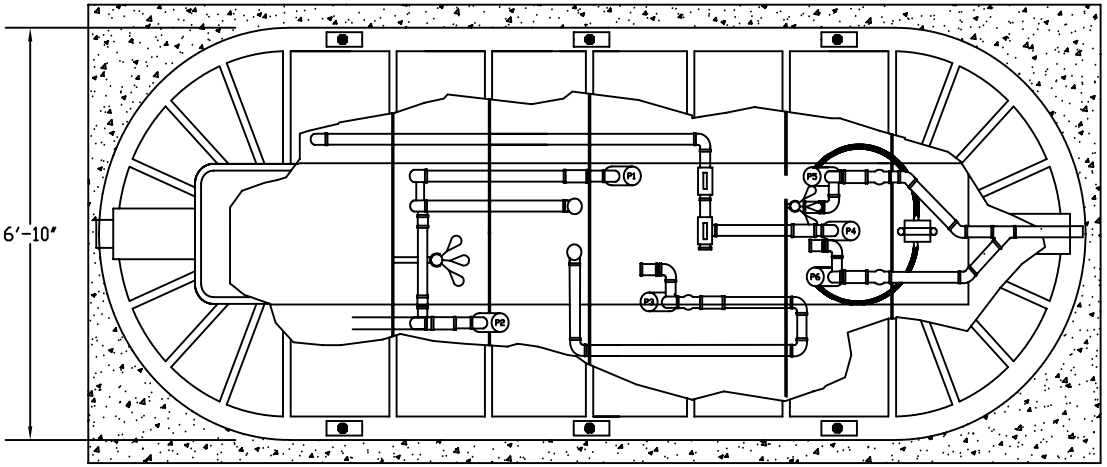

TITLE: Cromaglass CA-30	DRAWN BY: JBG/KJY	DATE: 06/14/05	*CROMAGLASS® CORPORATION* WILLIAMSPORT, PA
	REVIEWED BY:	DATE:	
	REVIEWED BY:	DATE:	
	REVIEWED BY:	DATE:	THIS DRAWING, AND THE INFORMATION CONTAINED THEREIN, IS THE CONFIDENTIAL PROPRIETARY INFORMATION OF CROMAGLASS CORPORATION AND MAY NOT BE USED OR REPRODUCED WITHOUT APPROVAL OF CROMAGLASS CORPORATION.
	APPROVED BY:	DATE:	
	SCALE: NTS		

COPYRIGHT CROMAGLASS CORPORATION 2000. ALL RIGHTS RESERVED.