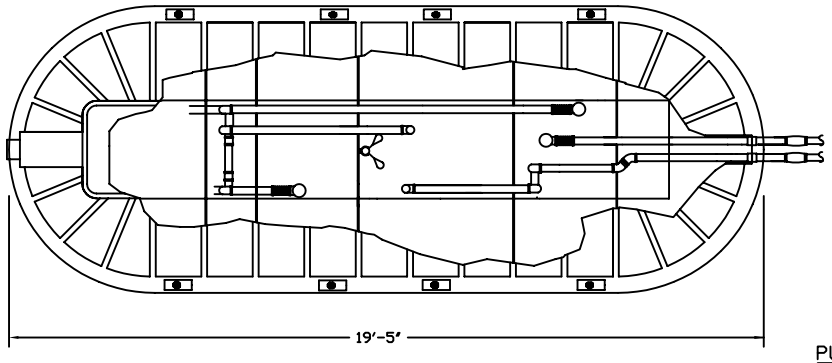

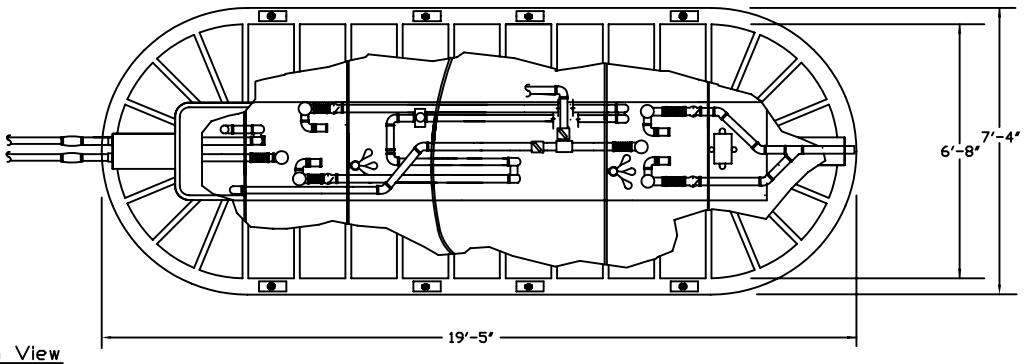

Plan View

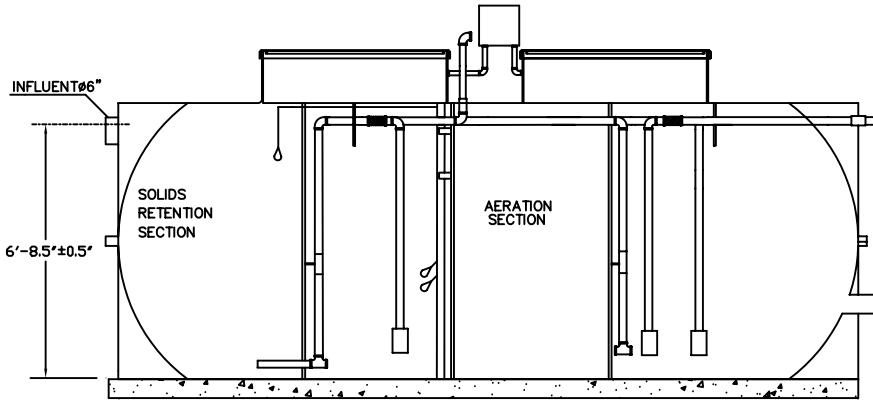

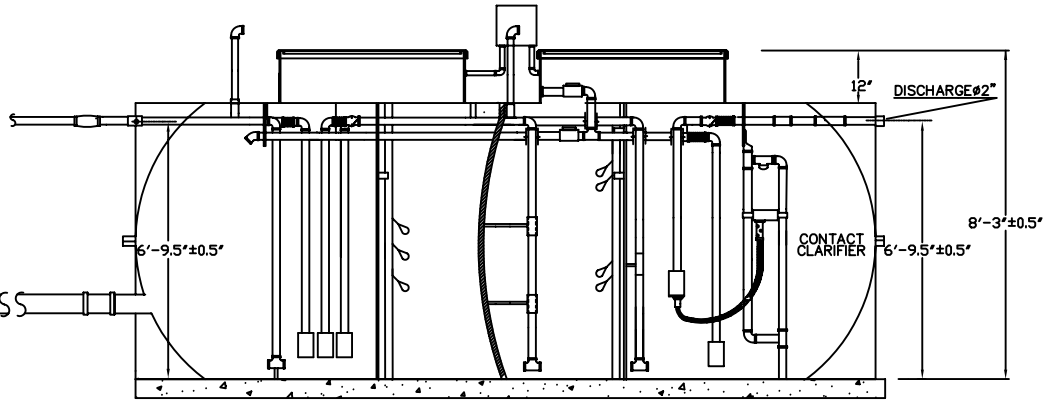

TITLE: Cromaglass CA-150 Drawing	DRAWN BY: JBG/KJY	DATE: 6/14/05	CROMAGLASS® CORPORATION WILLIAMSPORT, PA
	REVIEWED BY:	DATE:	
	REVIEWED BY:	DATE:	
	REVIEWED BY:	DATE:	THIS DRAWING, AND THE INFORMATION CONTAINED THEREIN, IS THE CONFIDENTIAL PROPRIETARY INFORMATION OF CROMAGLASS CORPORATION AND MAY NOT BE USED OR REPRODUCED WITHOUT APPROVAL OF CROMAGLASS CORPORATION. COPYRIGHT CROMAGLASS CORPORATION 2000. ALL RIGHTS RESERVED.
	APPROVED BY:	DATE:	
	SCALE: NTS		