# AdvanTex® Treatment System

AX 15 Series

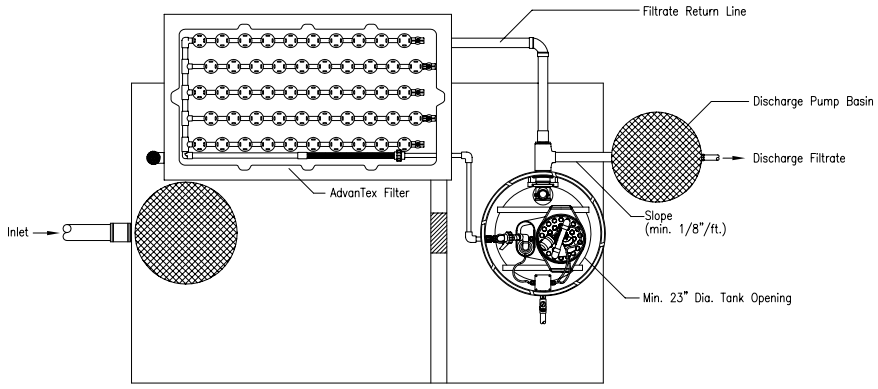


Top View

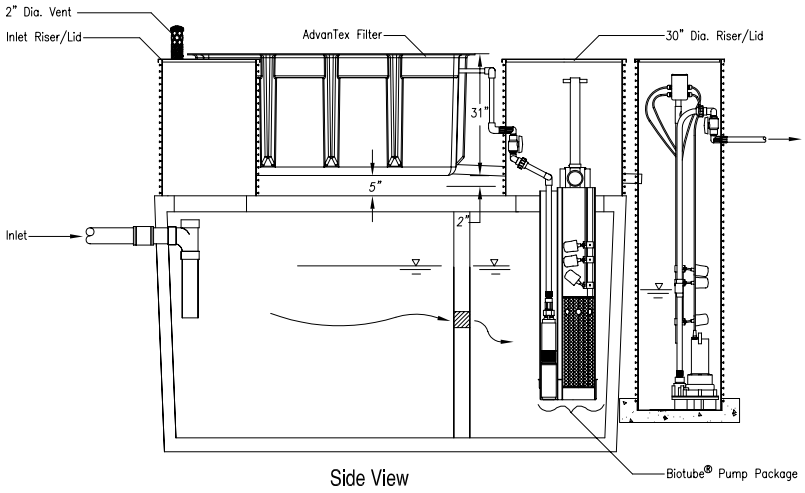


Side View

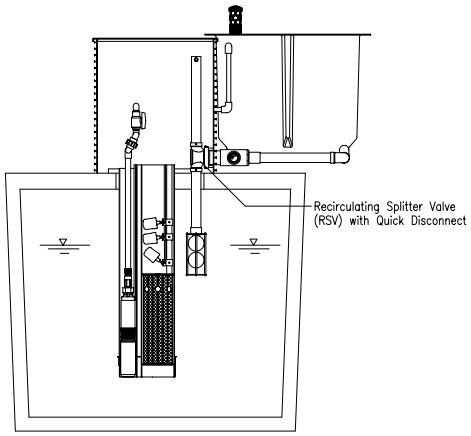


End View

| | | | | | |
|---|---|---|---|---|---|
| U.S. Patents 5,480,561 4,439,323 and 5,492,635 Other Patents Pending | Designed By: ENGINEERING | Drawn By: CHRIS JORDAN | Title: AdvanTex® - AX15 | | Orenco Systems® Incorporated |
| | Approved By: | Drawing: | Revision # | | |
| | Date Approved: | Revision: | Date: 1/17/03 | Scale: 1" = 4'-0" | |

© 2001 Orenco Systems®, Inc.

# AdvanTex® Treatment System

AX 15 Series

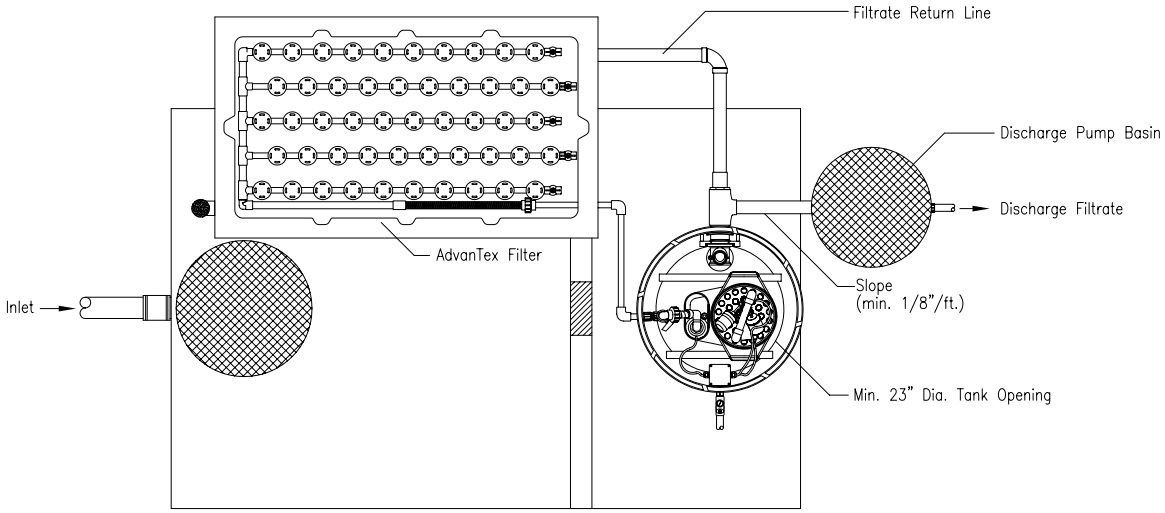


Top View

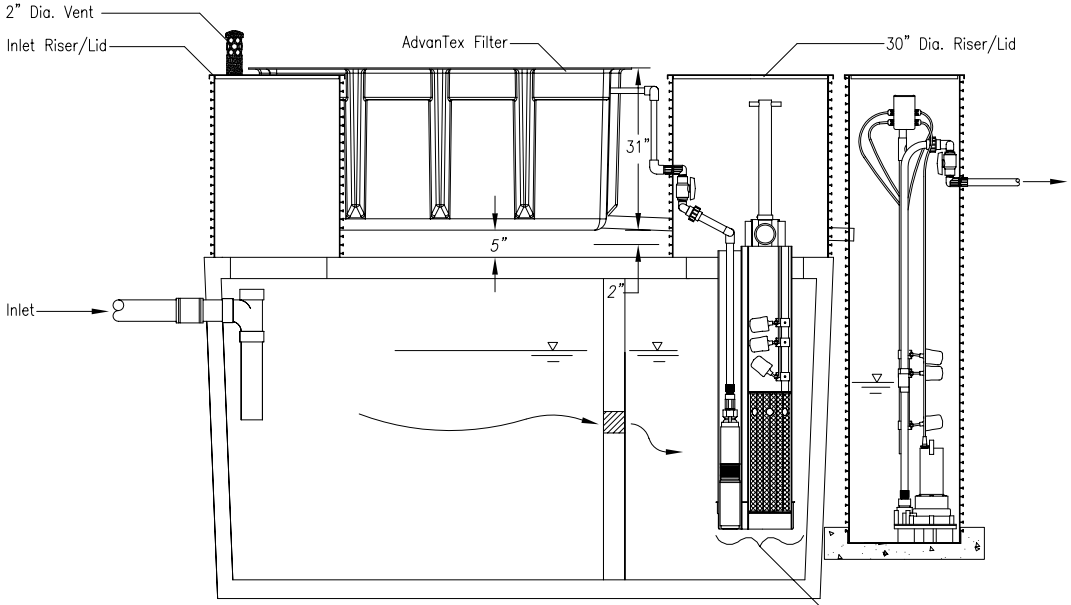


Side View

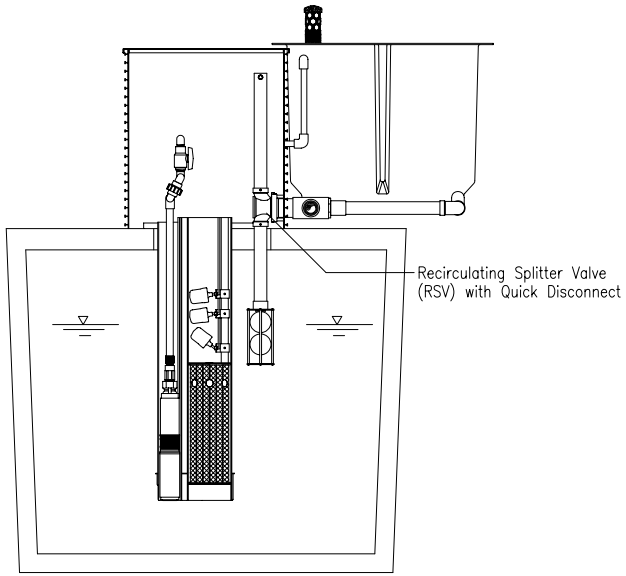


End View

U.S. Patents
5,480,561
4,439,323 and 5,492,635
Other Patents Pending

© 2001 Orenco Systems®, Inc.

| | | |
|---|---|---|
| Designed By: ENGINEERING | Approved By: | Date Approved: |
| Drawn By: CHRIS JORDAN | Drawing: | Revision: |
| Title: AdvanTex® - AX15 | Revision # | Date: 1/17/03 |
| | | Scale: 1" = 3'-0" |

Orenco Systems®
Incorporated

# AdvanTex® Treatment System

AX 20 Series

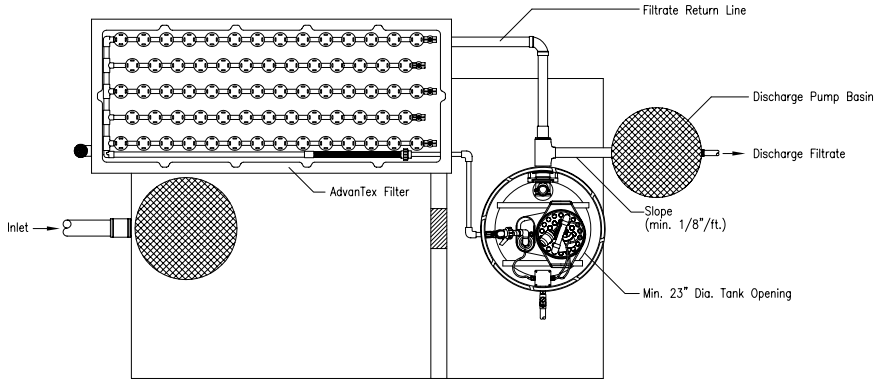


Top View

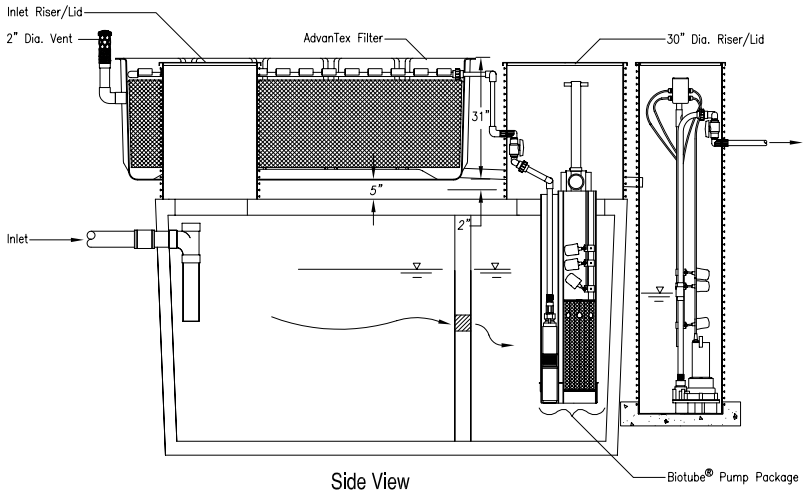


Side View

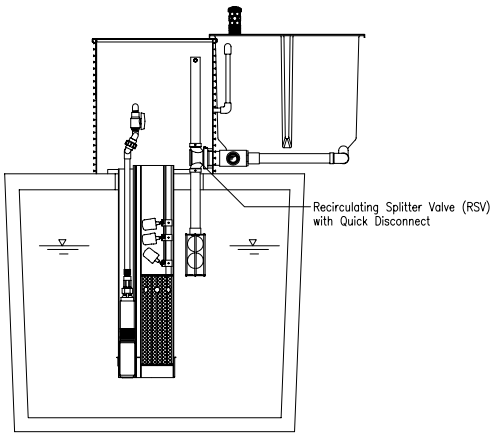


End View

| | | | | | |
|---|---|---|---|---|---|
| U.S. Patents 5,480,561 4,439,323 and 5,492,635 Other Patents Pending | Designed By: ENGINEERING | Drawn By: CHRIS JORDAN | Title: AdvanTex® - AX20 | | Orenco Systems® Incorporated |
| | Approved By: | Drawing: | Revision # | | |
| | Date Approved: | Revision: | Date: 1/17/03 | Scale: 1" = 4'-0" | |

© 2001 Orenco Systems®, Inc.

# AdvanTex® Treatment System
AX 20 Series

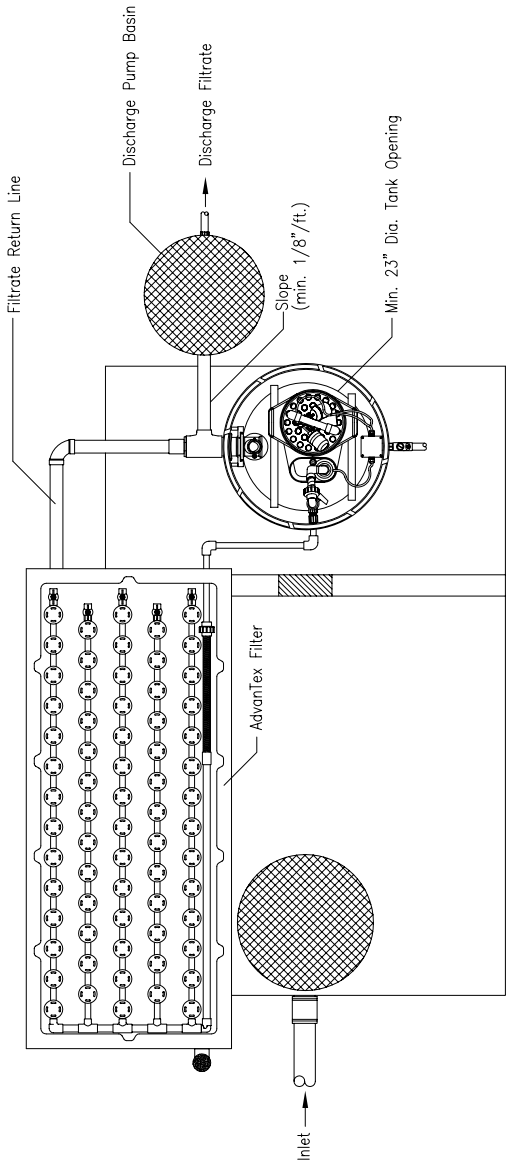


Top View

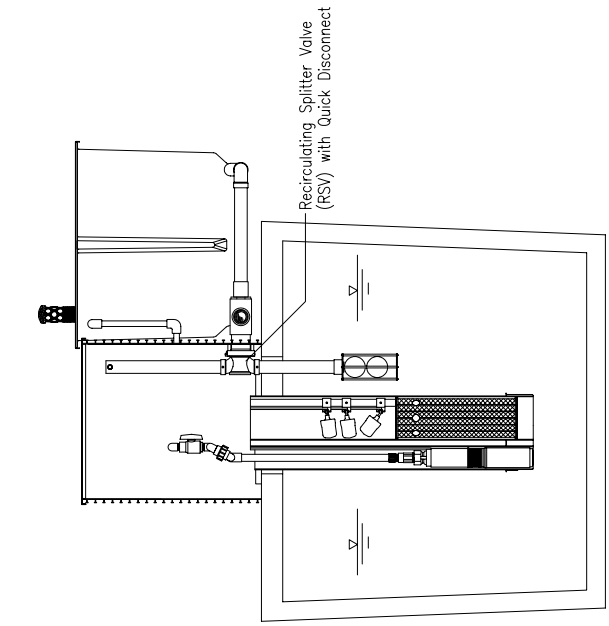


End View

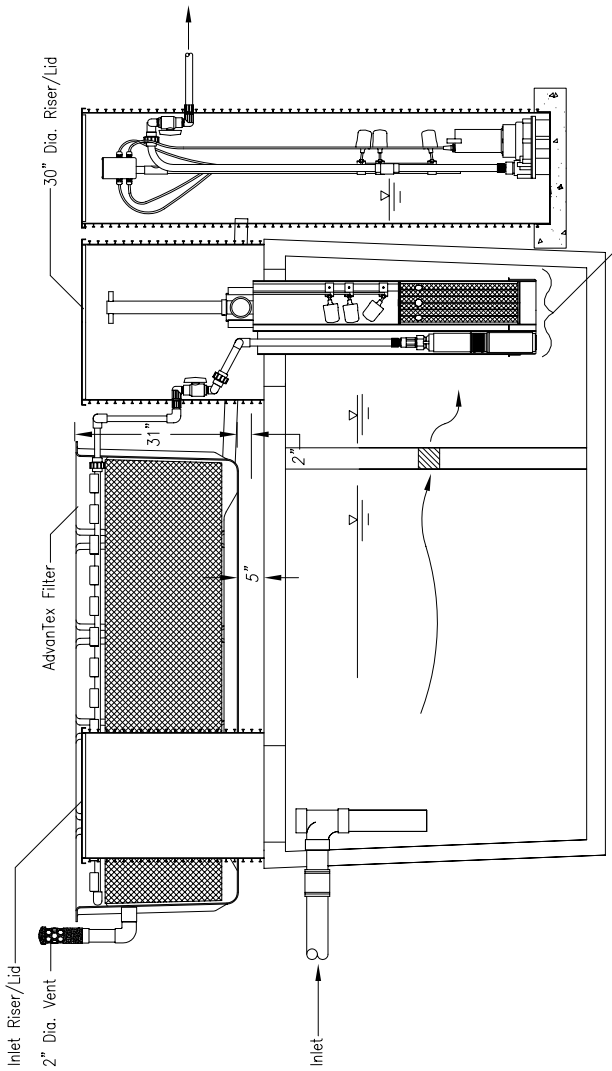


Side View

| | | | | | |
|---|---|---|---|---|---|
| U.S. Patents 5,480,561 4,439,323 and 5,492,635 Other Patents Pending © 2001 Orenco Systems®, Inc. | Designed By: ENGINEERING | Drawn By: CHRIS JORDAN | Title: AdvanTex® - AX20 | | Orenco Systems® Incorporated |
| | Approved By: | Drawing: | Revision # | | |
| | Date Approved: | Revision: | Date: 1/17/03 | Scale: 1" = 3'-0" | |

**AdvanTex® Treatment System**
AX 100 Series

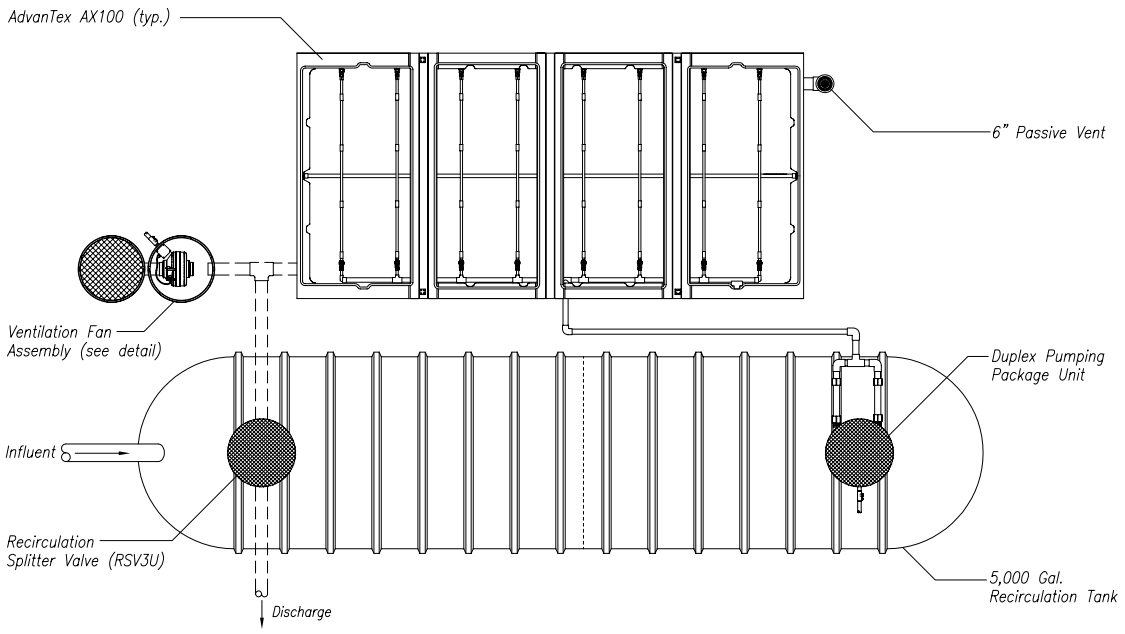


| | | | | | |
|---|---|---|---|---|---|
| U.S. Patents 5,480,561 4,439,323 and 5,492,635 Other Patents Pending | Designed By: ENGINEERING | Drawn By: CHRIS JORDAN | Title: AdvanTex® - AX100 | | Orenco Systems® Incorporated |
| | Approved By: | Drawing: | Revision # | | |
| | Date Approved: | Revision: | Date: 1/17/03 | Scale: 1" = 6'-0" | |

© 2001 Orenco Systems®, Inc.

**AdvanTex® Treatment System**
AX 100 Series

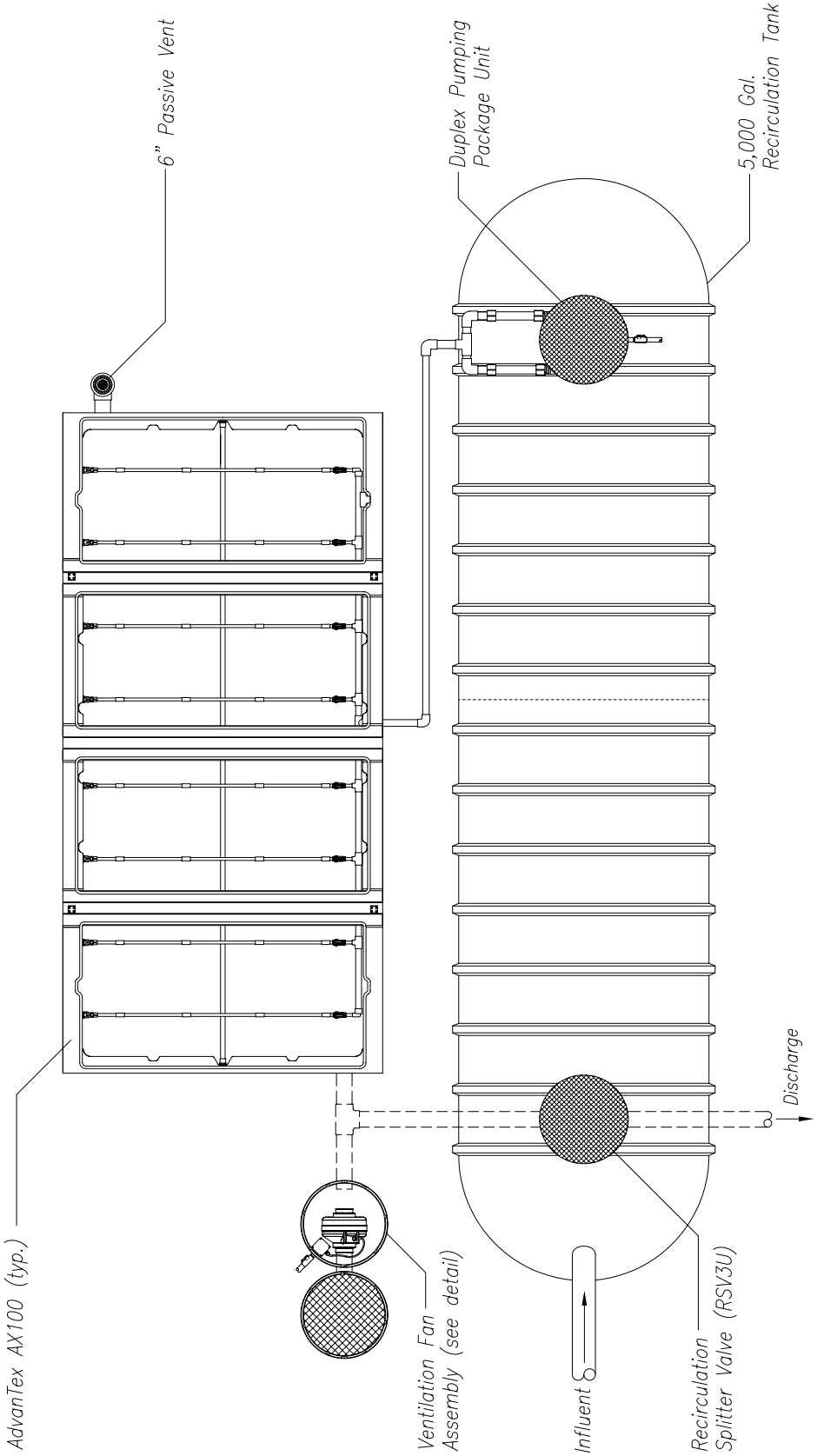


| | | | | | |
|---|---|---|---|---|---|
| U.S. Patents 5,480,561 4,439,323 and 5,492,635 Other Patents Pending | Designed By: ENGINEERING | Drawn By: CHRIS JORDAN | Title: AdvanTex® - AX100 | | Orenco Systems® Incorporated |
| | Approved By: | Drawing: | Revision # | | |
| | Date Approved: | Revision: | Date: 1/17/03 | Scale: 1" = 4'-0" | |

© 2001 Orenco Systems®, Inc.