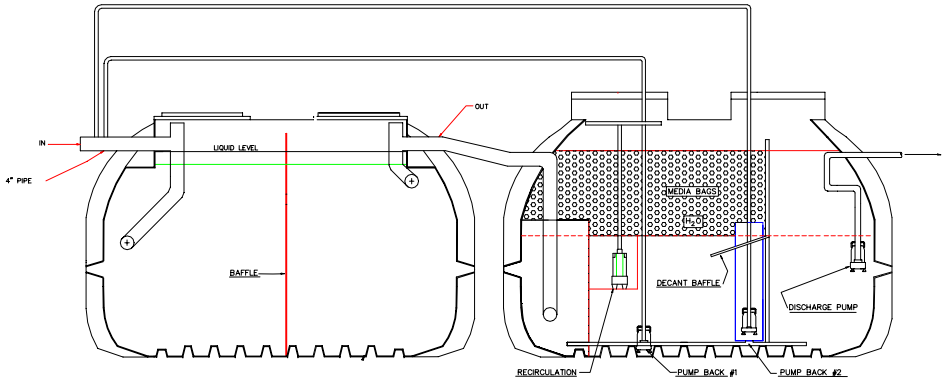

PRIMARY ANOXIC TANK

AEROBIC TANK

M400N – M750N

SeptiTech
Zero Pollution Waste Water Systems

SeptiTech Inc.
220 Lewiston Road
Gray, ME 04039

Phone: (207) 657-5252
Fax: (207) 657-5246
E-Mail: info@septitech.com

DATE: 1/24/02	DWG. NO.:M400N–M750N
SCALE: NTS	REV.: 0