SHIPPING WEIGHTS
WEIGHT DRY WITH MEDIA = 5200 lbs (FRP) or 10800 lbs (Steel)
WEIGHT DRY WITH NO MEDIA = 3400 lbs (FRP) or 9000 lbs (Steel)

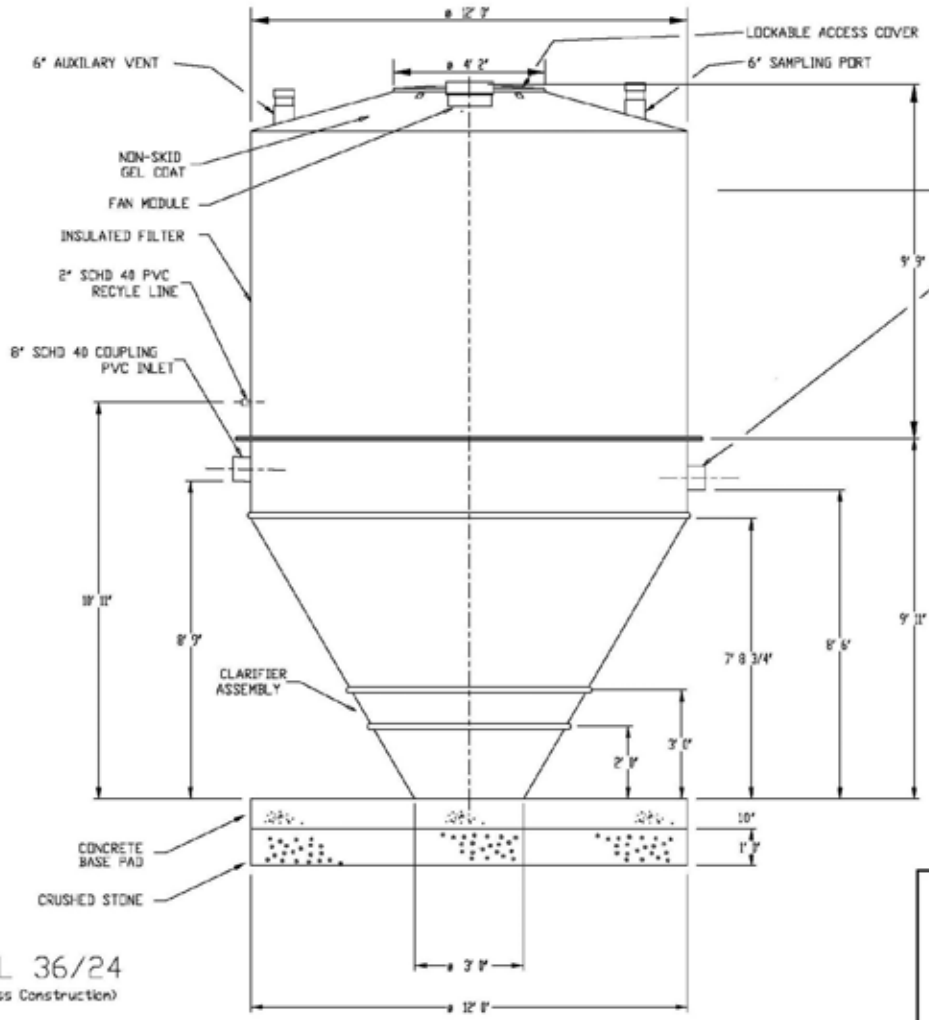

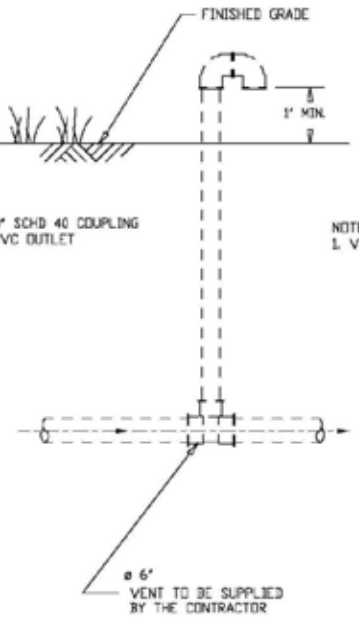

NOTES:
1. VENT MAY BE RUN UP THE SIDE OF BUILDING.

MODEL 36/24
(Fiberglass Construction)

DISTRIBUTION STATEMENT
THE DESIGN AND DETAIL OF THIS DRAWING IS THE PROPERTY OF AQUAPOINT AND IS NOT TO BE USED EXCEPT IN CONNECTION WITH OUR WORK. DESIGN AND INVENTION RIGHTS ARE RESERVED. NO FURTHER DUPLICATION AND DISTRIBUTION OF THIS DOCUMENT IS PERMITTED WITHOUT PRIOR WRITTEN PERMISSION.

Aquapoint
241 DUCHAINE BLVD.
P.O. BOX 50120
NEW BEDFORD, MA 02745
(508) 998-7577 FAX (508) 998-7177

TITLE:	BIOCLERE 12' DIA BIOFILTER GENERAL ARRANGEMENT
DRAWING NO:	UK.1263-13
REVISION:	A
DATE:	04/3/02
DWN BY:	P.Willey
SCALE:	1 : 40 SIZE: B
SHEET #:	1 of 1