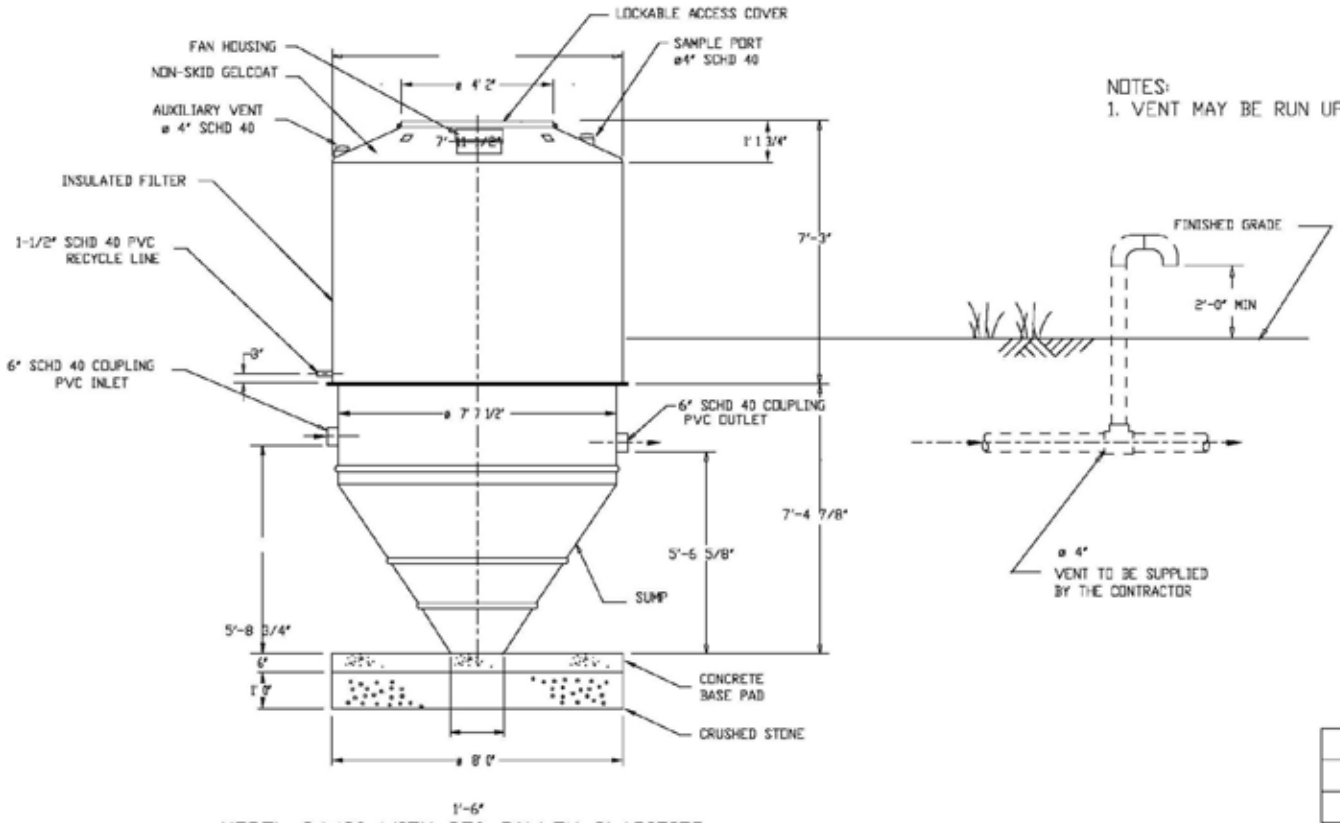

NOTES:
1. VENT MAY BE RUN UP THE SIDE OF BUILDING.

MODEL 24/20 WITH 950 GALLON CLARIFIER

SHIPPING WEIGHTS
WEIGHT DRY WITH MEDIA = 2350 lbs
WEIGHT DRY WITH NO MEDIA = 1600 lbs

DISTRIBUTION STATEMENT
THE DESIGN AND DETAIL OF THIS DRAWING IS THE PROPERTY OF AQUAPOINT AND IS NOT TO BE USED EXCEPT IN CONNECTION WITH OUR WORK. DESIGN AND INVENTION RIGHTS ARE RESERVED. NO FURTHER DUPLICATION AND DISTRIBUTION OF THIS DOCUMENT IS PERMITTED WITHOUT PRIOR WRITTEN PERMISSION.

Aquapoint
241 DUCHAINE BLVD.
P.O. BOX 50120
NEW BEDFORD, MA 02745
(508) 998-7577 FAX (508) 998-7177

TITLE:	BIOCLERE 24/20 GENERAL ARRANGEMENT
DRAWING NO:	UK1261-2
REVISION:	
DATE:	10/26/00
DWN BY:	P.Wiley
SCALE:	1 : 40 SIZE: B
SHEET #:	1 of 1